J G Coates (Burnley) Ltd, Trafalgar Street,
Burnley, Lancashire, BB11 1TH
01282 424376
sales@cotel.co.uk

80mm Crank Handle 5mm Bore
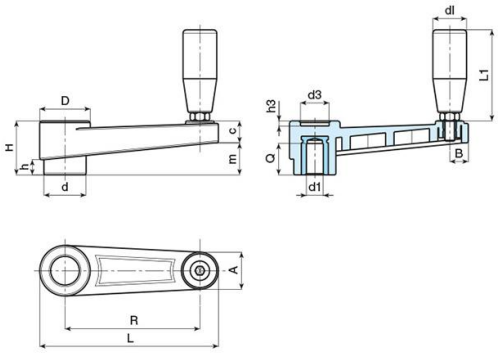
Part Number	4433/80/25
D	30
d	26
H	33
m	19
d1	5
dm	14
Insert Material	Steel ZP
Material	Reinforced Polyamide
A	21.5
L	106
R	80
L1	56
Colour	Black